BEST MOTOR
Tel. 059 - 858059
fax. 059 - 850410

ISO-DIN

MOTORE-TRAZIONE SINCRONO A MAGNETI PERMANENTI AC4 POLI Ø150 IP 65 CON ENCODER SIN-COS E FRENO 40Nm 48VDC (REV. 0 DEL 05/09/2018)

POTENZA POWER	TENSIONE VOLTAGE	CORRENTE CURRENT	RPM	SERVIZIO SERVICE	SERVIZIO SERVICE	CLASSE ISOL.	INDEX COOLING	ECCITAZIONE	PESO WEIGHT
4 kW	48VDC-32VAC	85 A	4000	S2 = 60'	S3 = 70 %	F	IC410	AC (133 Hz)	--

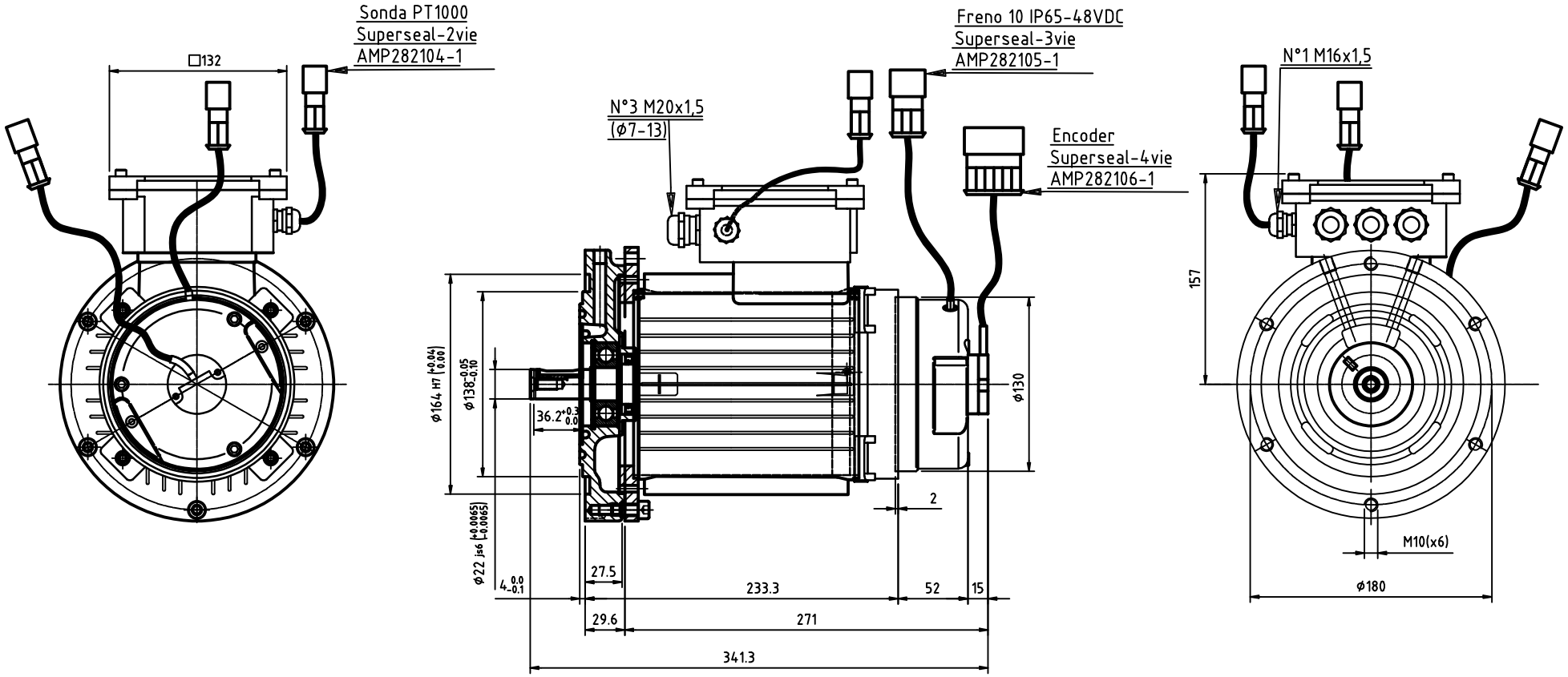

ANALOGUE SINUSOIDAL OUTPUTS		
POWER SUPPLY:	+5V DC ±5%	
OUTPUT CURRENT	13 mA max.	
OUTPUT: SIGNAL AMPLITUDE 2 ±0.2 Vpp		
N°PIN:	DESCRIPTION:	COLOUR:
1	+Vdd	RED
2	Cos	BLUE
3	Sin	WHITE
4	GND	BLACK

U-V-W SEQUENCE

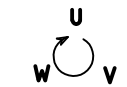

CLOCKWISE ROTATION
DRIVE AND VIEW

ENCODER (SIN COS)

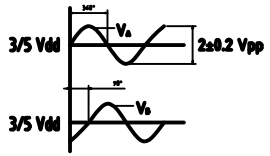

SUPERSEAL FRENO	
N°PIN:	DESCRIPTION:
1	CAVO FRENO
2	--
3	CAVO FRENO

J140023T

Firma PROG. : PO M.